# 13

Electromagnetic Induction

# 13.5

Circuits with Resistors and Inductors (LR Circuits)

# 13.5.1

Using Kirchhoff’s loop rule to derive the current and voltage equations for LR Circuits

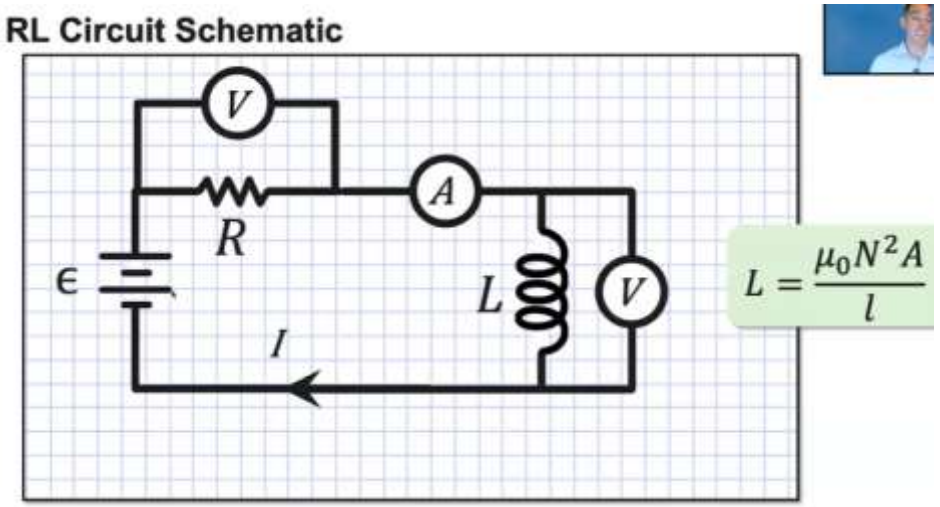


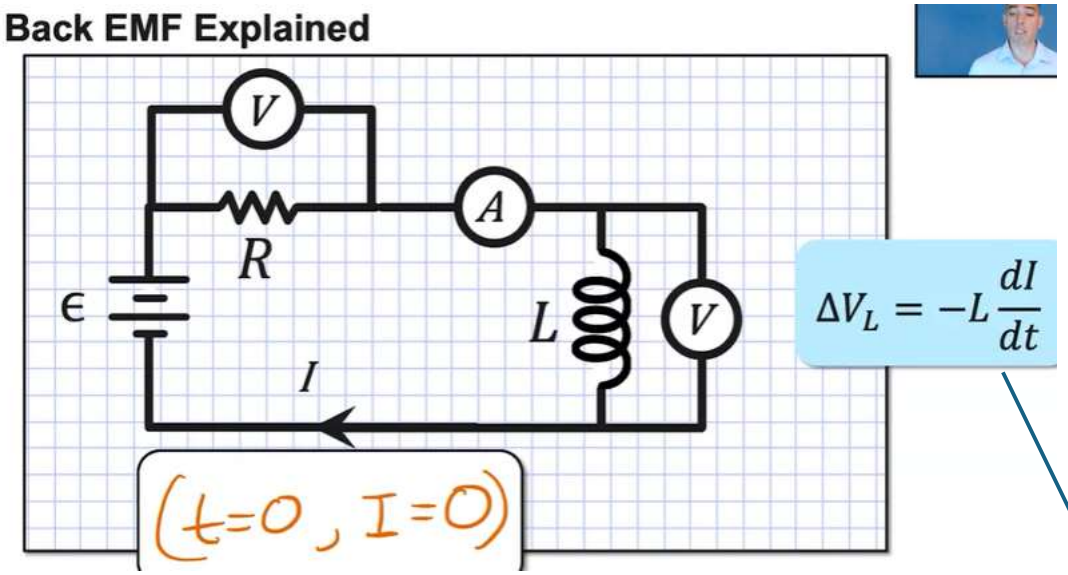


AKA eddy current

Positive sign because th
inductor will be OPPOSIN
the initial change in
current
We can treat it as a
"Backwards battery"

## Applying Kirchoff's Loop Rule

$$\mathcal{E} - \Delta V_R + \Delta V_L = 0$$

$$\mathcal{E} - IR - L\frac{dI}{dt} = 0$$

$$\mathcal{E} - IR = L\frac{dI}{dt}$$

$$\int \frac{1}{L}\,dt = \int \frac{dI}{\mathcal{E} - IR}$$

$$\frac{t}{L} + C = \frac{\ln|\mathcal{E} - IR|}{-R}$$

$$-\frac{Rt}{L} + C_1 = \ln|\mathcal{E} - IR|$$

$$C_2 e^{t/(L/R)} = \mathcal{E} - IR$$

$$I = \frac{\mathcal{E}}{R} - C_3 e^{-t/(L/R)}$$

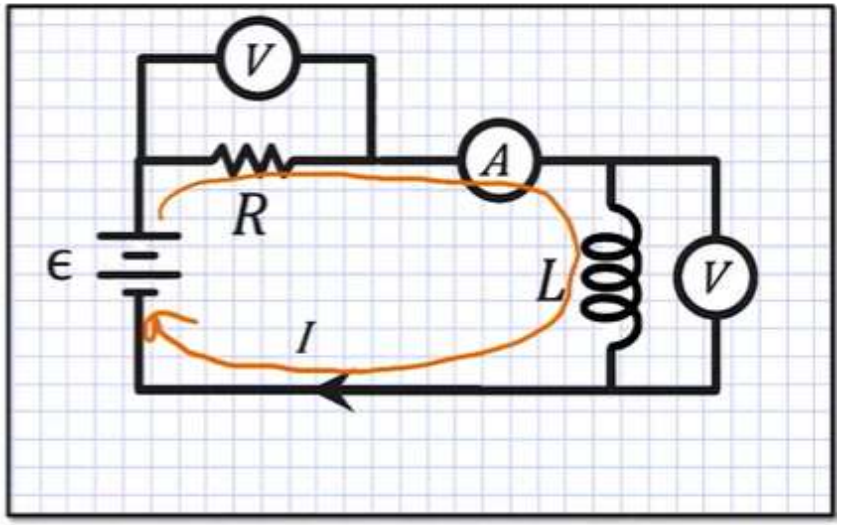

# Applying Kirchoff's Loop Rule

$$I(t) = C_3 - \frac{\mathcal{E}}{R} e^{-t/(L/R)}$$

$$I(t=0) = 0$$

$$0 = C_3 - \frac{\mathcal{E}}{R} e^{0}$$

$$C_3 = \frac{\mathcal{E}}{R}$$

$$\boxed{I(t) = \frac{\mathcal{E}}{R}\left(1 - e^{-t/(L/R)}\right)}$$

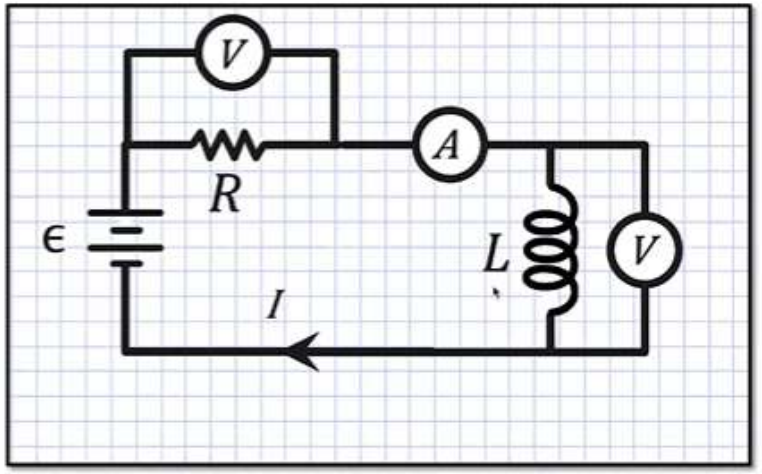


$$\tau_{RL} = \left(\frac{L}{R}\right)$$ Time Constant

## Applying Kirchoff's Loop Rule

$$I(t) = \frac{\varepsilon}{R}\left(1 - e^{-t/\tau}\right)$$

$$\Delta V_R(t) = I(t)R$$
$$= \varepsilon\left(1 - e^{-t/\tau}\right)$$

$$\Delta V_L(t) = -L\frac{dI}{dt}$$
$$= -L\left(\frac{-\varepsilon}{R\tau}e^{-t/\tau}\right)$$
$$= \varepsilon e^{-t/\tau}$$

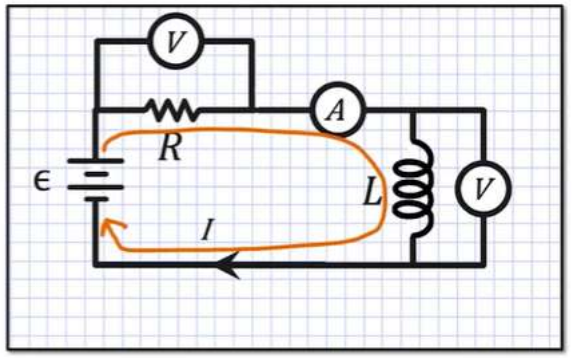

## Current v. Time

$$I(t) = \frac{\varepsilon}{R}\left(1 - e^{-t/\tau}\right)$$

$\varepsilon = 9\,V$

$R = 2\,\Omega$

$L = 10\,H$

$\tau = \frac{L}{R} = 5\,s$

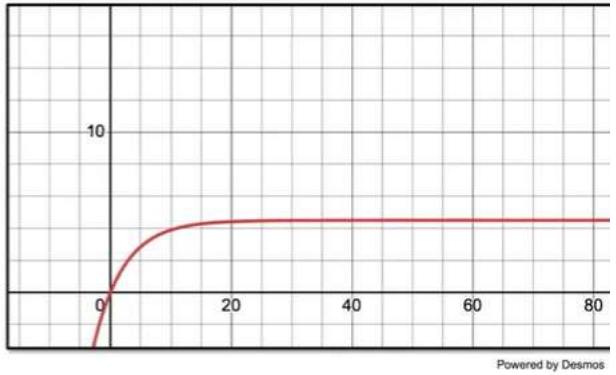


## Potential Difference v. Time

$$\Delta V_R(t) = \varepsilon\left(1 - e^{-t/\tau}\right)$$

$$\Delta V_L(t) = \varepsilon e^{-t/\tau}$$

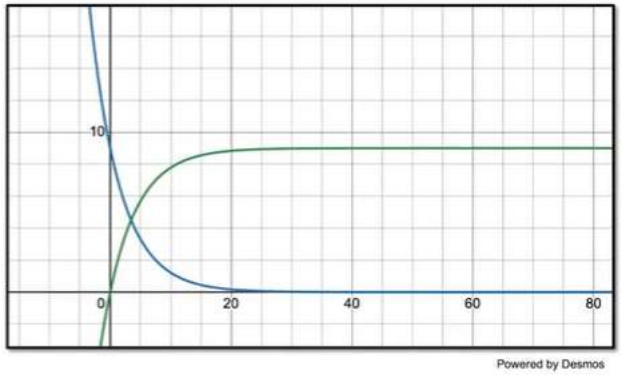

# Takeaways

At time $t = 0$, the current in series with the inductor is 0 as the inductor opposes the rapid change in current.

After a long time, the inductor will no longer oppose the rapid change in current and will act like a wire.

$$I(t) = I_{max}(1 - e^{-t/\tau})$$

$$\tau = \frac{L}{R} \qquad I_{max} = \frac{\epsilon}{R}$$

$\Delta V_R(t) = I(t)R$ and

$\Delta V_L(t) = -L\frac{dI}{dt}$

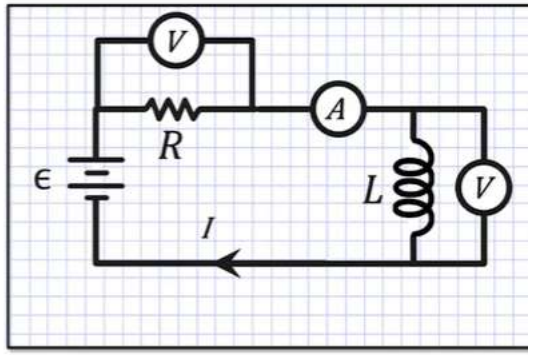

# 13.5.2

Energy stored in an inductor after steady-state conditions are reached and how it dissipates through a resistor

**Storing Energy in an Inductor and Discharging Through A Resistor**

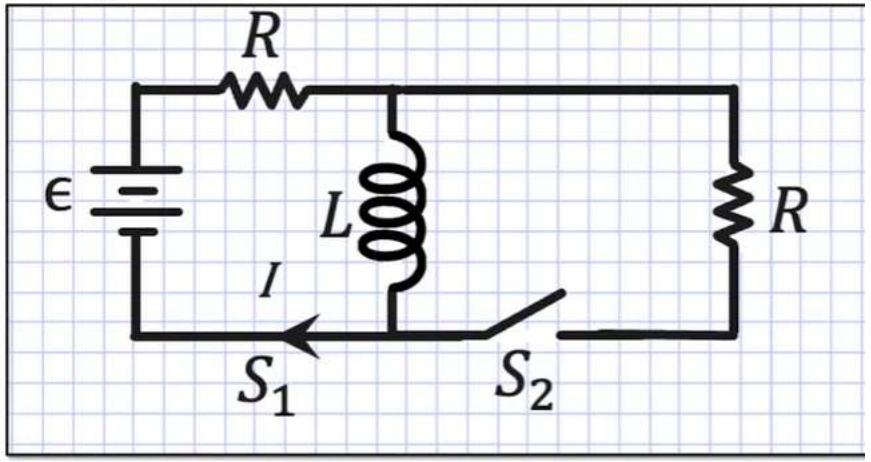


$t \to \infty$

**Storing Energy in an Inductor**

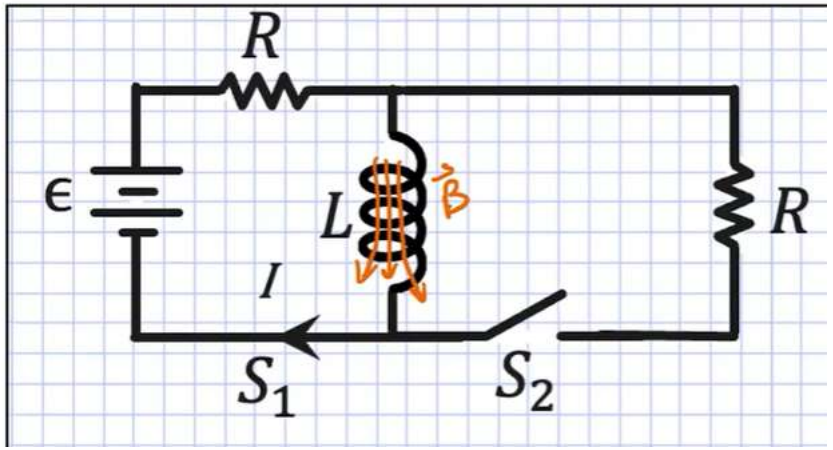

## Storing Energy in an Inductor

$$dE = P\,dt = I\Delta V\,dt$$

$$dE = I\left|L\frac{dI}{\cancel{dt}}\right|\cancel{dt}$$

$$dE = I L\,dI$$

$$E = \int_0^I L I'\,dI'$$

$$E = \frac{1}{2} L I^2$$

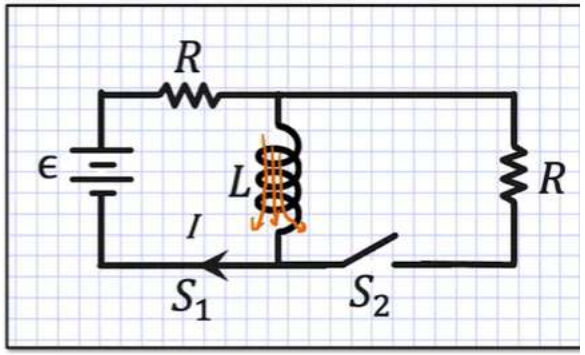

## Discharging Through A Resistor

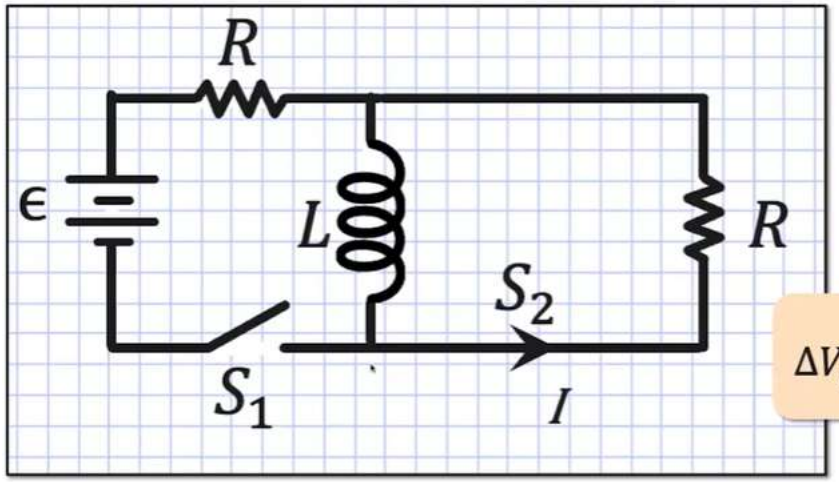


$$\Delta V_L = -L\frac{dI}{dt}$$

## Discharging Through a Resistor

$$\Delta V_L - \Delta V_R = 0$$

$$-L\frac{dI}{dt} - IR = 0$$

$$-L\frac{dI}{dt} = IR$$

$$\int \frac{dI}{I} = \int \frac{-R\,dt}{L}$$

$$\ln|I| = -\frac{Rt}{L} + C$$

$$I = C_1 e^{-t/(L/R)}$$

$t=0,\ I=\frac{\varepsilon}{R}$

$$I(t) = \frac{\varepsilon}{R} e^{-t/\tau}$$

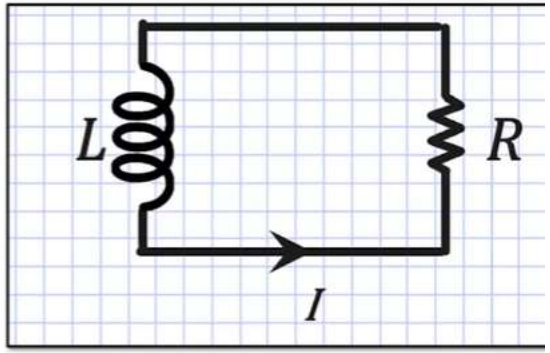

# Takeaways

The energy stored in a current-carrying inductor is stored in the induced magnetic field and can be calculated by $U_L = \frac{1}{2}LI^2$.

Timing of switches can allow this energy to dissipate through a resistor, very similarly to how a capacitor would discharge through a resistor.

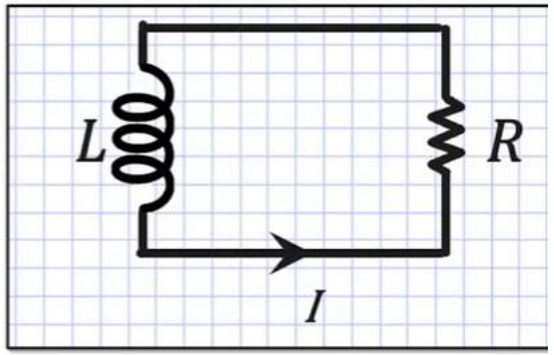

# 13.5.3

Analyzing steady-state conditions for various open/closed switch scenarios involved in LR circuits

## Immediate and Steady State Conditions

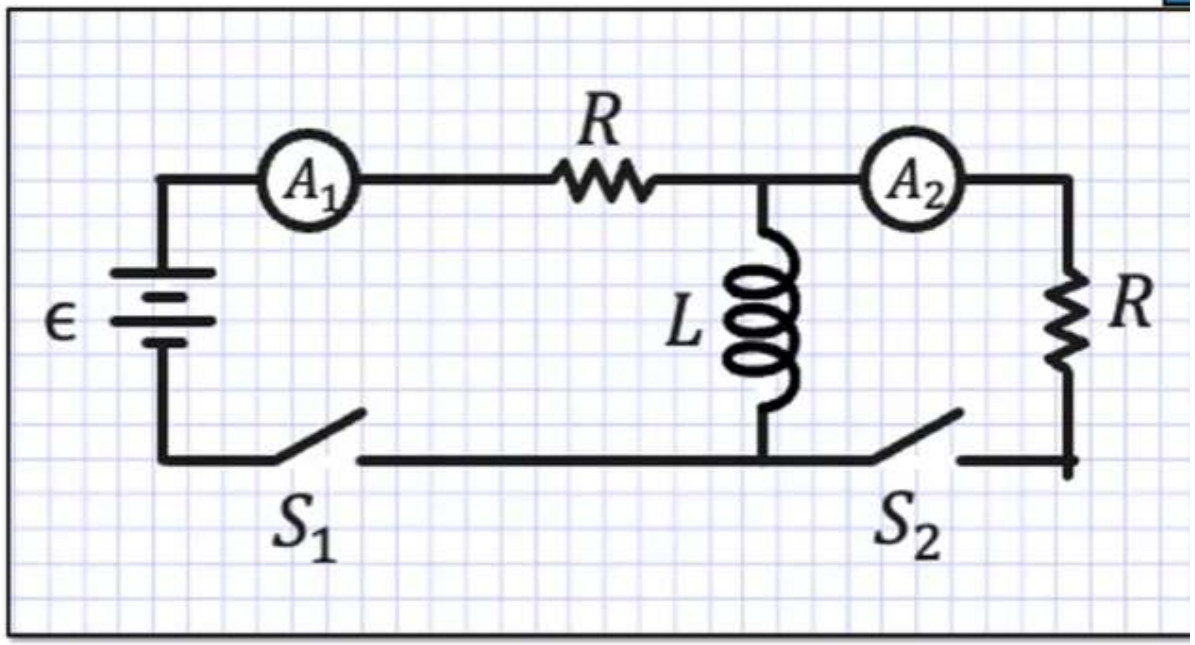

## Immediate Conditions

- At $t = 0s$, we close both switches simultaneously.
- Inductor acts like an open switch at $t = 0s$.
- Current will flow through both resistors and switches, but not through the inductor.
- Current measured in both $A_1$and $A_2$ is $\frac{\varepsilon}{2R}$ and is moving from left to right in both ammeters.

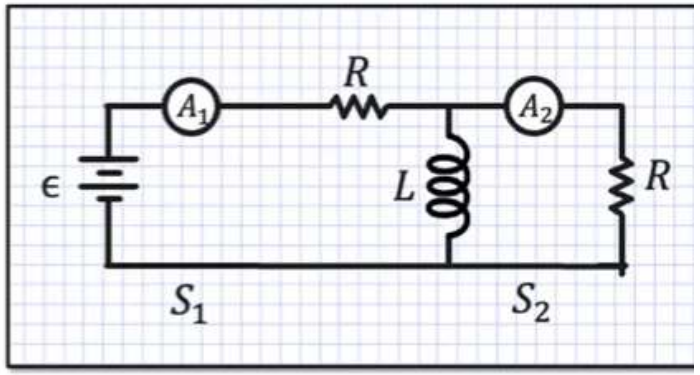

## Steady State Conditions

- After a long time, current measured by $A_1$ is $\frac{\varepsilon}{R}$, moving from left to right through $A_1$.
- After a long time, current measured by $A_2$ is zero.
- Inductor acts like a wire after a long time, allowing current to flow from the top to the bottom.

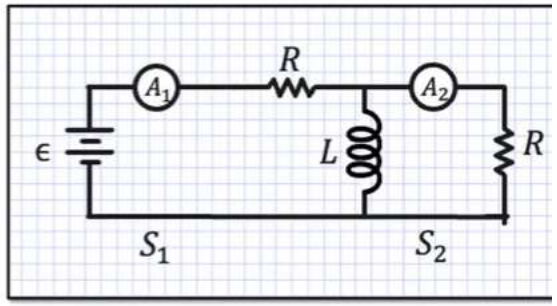

# Immediate Conditions

- Immediately after opening switch $S_1$, current in the inductor continues to be $\frac{\varepsilon}{R}$ and moving downward through the inductor.
- In this case, the inductor opposes the decrease in current from opening switch $S_1$.
- Current measured in $A_2$ is $\frac{\varepsilon}{R}$ moving from right to left through the ammeter and will decay to zero over time.

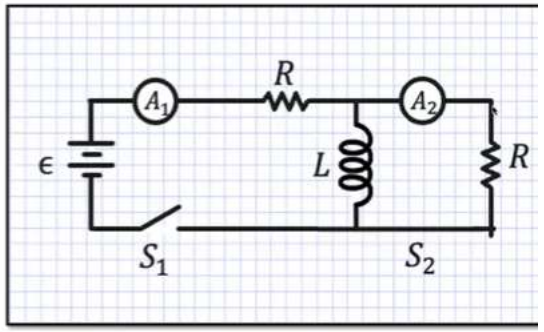

# Takeaways

| At $t = 0s$ | After a long time… |
| --- | --- |
| • The inductor opposes a rapid change in current, with the potential difference expression as $\Delta V_L = -L\frac{dI}{dt}$ | • The inductor will no longer oppose the rapid change in current and the potential difference across the inductor will be zero. |
| • The net current through the inductor will initially be zero, then start to gradually increase. | • The inductor can be thought of as a wire with negligible resistance at this point, and there is energy stored in the inductor, which can be expressed as $U_L = \frac{1}{2}LI^2$ |
| • The inductor can be thought of as an open switch at this point, with no energy stored due to no current flow and no magnetic field present. | • An inductor that has a current flowing through it can then dissipate that energy through a resistor with an exponentially decaying current over time. |

# 13

Electromagnetic Induction

# 13.6

Circuits with Capacitors and Inductors (LC Circuits)

# 13.6.1

An experiment studying the relationship between potential energy stored in capacitors and inductors in an ideal LC circuit

## Capacitors vs. Inductors

| Capacitors | Inductors |
|---|---|
| • Schematic Symbol: **C** | • Schematic Symbol: **L** |
| • Unit: Farad (**F**) | • Unit: Henry (**H**) |
| • Equation: $C = \frac{\kappa \varepsilon_0 A}{d}$ | • Equation: $L = \frac{\mu_{core} N^2 A}{\ell}$ |
| • Stores energy in its electric field | • Stores energy in its magnetic field |
| • $U_C = \frac{1}{2} C \Delta V^2$ | • $U_L = \frac{1}{2} L I^2$ |
| • Initial charging acts like “wire” | • Initial current acts like “opposing battery” |
| • Steady charge acts like “opposing battery” | • Steady current acts like “wire” |

# LC Circuits (A model)

Bravo, Michael (mbravo@mdc.edu) is signed in

- Circuits with only an **inductor** (**L**) and **Capacitor** (**C**) are known as **LC circuits**.

- Physics is all about models. In an **LC circuit**, **capacitors** and **inductors** (and connecting wires) are assumed to be ideal.

- In reality, there would be some resistance (known as an RLC Circuit), but let's learn what we can from an ideal **LC circuit** model.

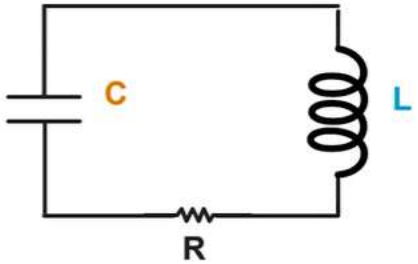

## Lab Design

Create a lab set-up using the schematics shown at right to "charge" the capacitor in an LC circuit and then control when to discharge.

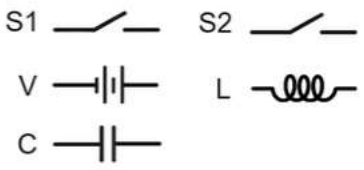


## Lab Design

- This circuit will "**charge**" the capacitor when **S1** is **closed**, then with **S1** **open**, **close** **S2** to create the LC circuit.
- For our example, we will **close** **S1** to charge capacitor, then **disconnect** the battery entirely for simplicity.

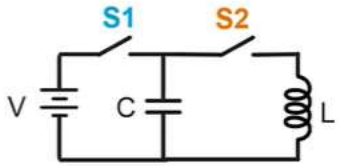

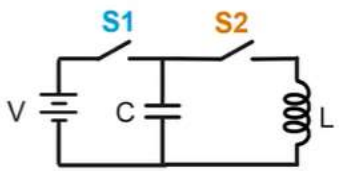


## Lab Design

Where should a **voltmeter** and **ammeter** be attached to determine the voltage of the capacitor and current in the circuit?

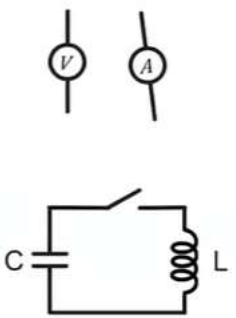

## Lab Design

| $V_C$ (Volts) | I (Amps) |
|---|---|
| | |
| | |
| | |
| | |
| | |
| | |
| | |
| | |
| | |

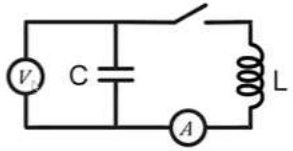


**Voltmeter** wired in parallel to capacitor

**Ammeter** wired in series with the inductor

## Data Collection

Some time after the switch has been closed…

| $V_C$ (Volts) | I (Amps) |
|---|---|
| 10.0 | 0.0 |
| 7.0 | 3.6 |
| 0.0 | 5.0 |
| -8.5 | 2.6 |
| -9.5 | 1.6 |
| -7.5 | -3.3 |
| -3.0 | -4.8 |
| 4.0 | -4.6 |
| 6.0 | -4.0 |

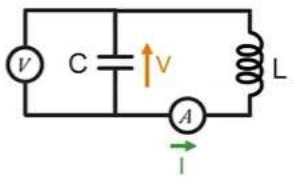

## Graphing Data

| $V_C$ (Volts) | I (Amps) |
|---|---|
| 10.0 | 0.0 |
| 7.0 | 3.6 |
| 0.0 | 5.0 |
| -8.5 | 2.6 |
| -9.5 | 1.6 |
| -7.5 | -3.3 |
| -3.0 | -4.8 |
| 4.0 | -4.6 |
| 6.0 | -4.0 |
| 9.0 | -2.2 |

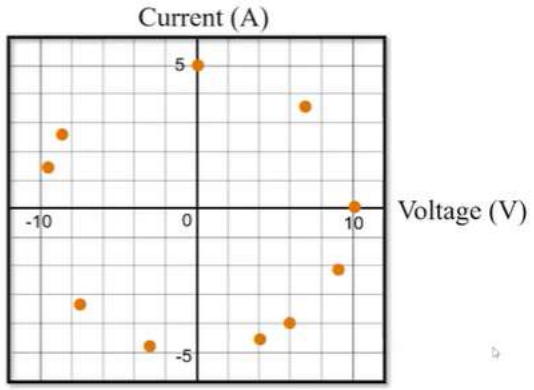


## Analyzing Data

The data is periodic!
(**See why in Video 2!**)

No energy lost from circuit
(**Ideal system**)

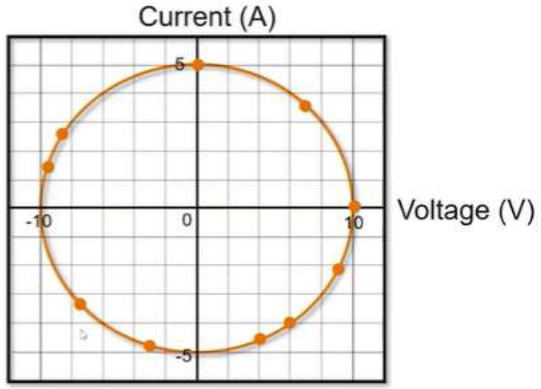

## Analyzing Data

The data is periodic!
(**See why in Video 2!**)

No energy lost from circuit
(**Ideal system**)

$$U_{Cmax} = U_C + U_L = U_{Lmax}$$

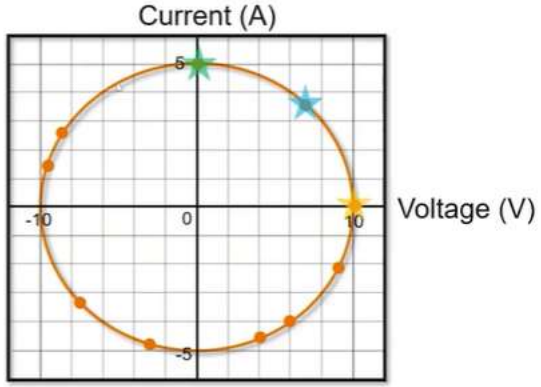

## Solving for maximum current

In circuits containing only a charged capacitor and an inductor, **the maximum current through the inductor can be determined using conservation of energy** within the circuit.

$$U_{Cmax} = U_C + U_L = U_{Lmax}$$

$$\frac{1}{2}C\Delta V_{max}{}^2 = \frac{1}{2}LI_{max}{}^2$$

## Lab to find Inductance

An LC circuit is set-up like before with a known capacitor (**0.1 F**). To determine the inductance of the inductor, the initial voltage of the capacitor is changed and the resulting maximum current is measured as shown in the chart below.

| $\Delta V_{CMax}$ | $I_{Max}$ |
|---|---|
| 5.0 | 1.1 |
| 10.0 | 1.6 |
| 15.0 | 2.6 |
| 20.0 | 3.2 |
| 25.0 | 4.8 |
| 30.0 | 6.0 |
| 35.0 | 6.2 |
| 40.0 | 7.1 |

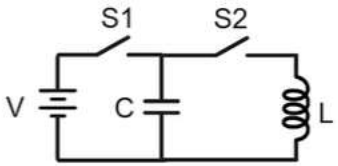


## Lab to find Inductance

C = 0.1 F

Next steps?

1) Draw Trendline
2) **Find Slope**
3) Connect slope to equation
4) Solve for L

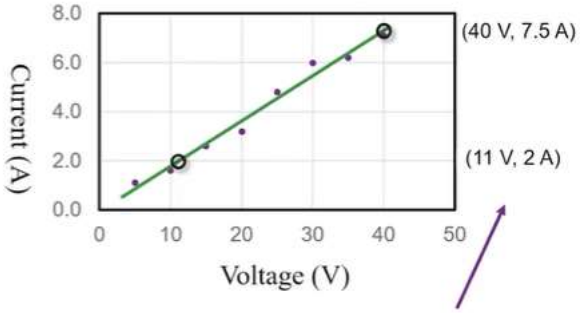


$$Slope = \frac{(7.5\ A - 2\ A)}{(40\ V - 11\ V)} = 0.19\ {}^{A}/_{V}$$

*FYI: Linear regression yields 0.1825* ${}^{A}/_{V}$

*Points on trendline,*
*NOT data points from chart!*

# Lab to find Inductance

C = 0.1 F

Next steps?

1) Draw Trendline
2) Find Slope
3) **Connect slope to equation**
4) Solve for L

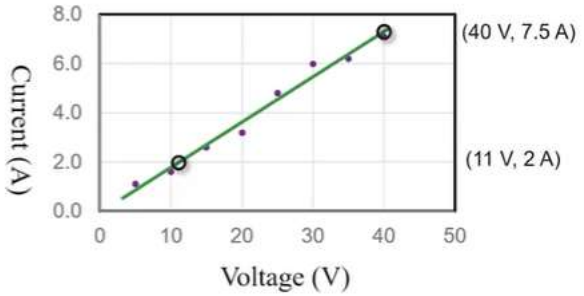


$Slope = 0.19\ {}^{A}/_{V}$

$\frac{1}{2}C\Delta V_{max}{}^{2} = \frac{1}{2}LI_{max}{}^{2} \rightarrow \sqrt{C}\Delta V_{max} = \sqrt{L}I_{max}$

$$I_{max} = \frac{\sqrt{C}}{\sqrt{L}}\Delta V_{max} \qquad \frac{\sqrt{C}}{\sqrt{L}} = Slope$$

# Lab to find Inductance

C = 0.1 F

Next steps?

1) Draw Trendline
2) Find Slope
3) Connect slope to equation
4) **Solve for L**

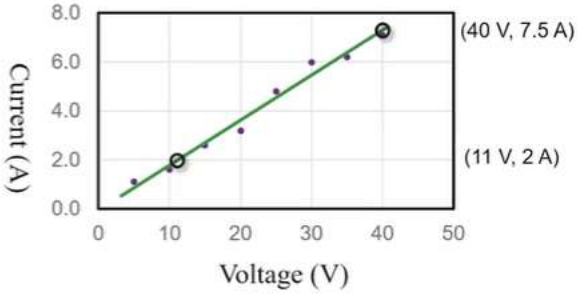


$Slope = 0.19\ {}^{A}/_{V}$

$\frac{\sqrt{C}}{\sqrt{L}} = Slope$

$\frac{\sqrt{0.1\ F}}{\sqrt{L}} = 0.19\ {}^{A}/_{V}$

$\frac{0.1\ F}{0.036\ {}^{A^2}/_{V^2}} = L$

$L = 2.8\ H$

## Solving for maximum current

A **0.4 F** capacitor is charged by a **9 volt** battery. The capacitor is then disconnected from the battery and attached to a **1.6 H** inductor. What is the maximum current in the circuit?

$$U_{Cmax} = U_{Lmax}$$

$$\frac{1}{2}(0.4\ F)(9\ V)^2 = \frac{1}{2}(1.6\ H){I_{max}}^2$$

$$\frac{1}{2}C\Delta{V_{max}}^2 = \frac{1}{2}L{I_{max}}^2$$

$$I_{max} = 4.5\ Amps$$

# Takeaways

- Circuits with only an **inductor** (**L**) and **Capacitor** (**C**) are known as LC circuits.
- The maximum current through the **inductor** in an LC circuit can be determined using conservation of energy within the circuit.
- In an experiment there would be some resistance resulting in loss of energy over time, but treating all circuit components as ideal helps learn general properties LC circuits.

# 13.6.2

Deriving the simple harmonic nature of an ideal LC circuit and its expected behavior

## Key Equations

| | |
|---|---|
| $C = \frac{Q}{\Delta V}$ | • $C$: Capacitance<br>• $Q$: Charge on plate(s) of capacitor<br>• $\Delta V$: Potential Difference across plates |
| $\varepsilon = -L\frac{dI}{dt}$ | • $\varepsilon$: EMF across inductor<br>• $L$: Inductance<br>• $\frac{dI}{dt}$: Time derivative of current |
| $I = \frac{dq}{dt}$ | • $I$: Current<br>• $\frac{dq}{dt}$: Time derivative of charge |

## Simple Harmonic Motion Review

A special case of periodic motion where restoring force is proportional to the object's displacement from equilibrium.

- **Mass-spring systems**: $-kx = ma \rightarrow -kx = m\frac{d^2x}{dt^2}$
- **Simple pendulums**: $-mgLsin(\theta) = I\alpha \rightarrow -g(\theta) = L\frac{d^2\theta}{dt^2}$

*sin(θ) = θ: Small angle approximation*

Note the common "-", variable, and second time derivative of the variable.

## Key Idea

In circuits containing only a charged capacitor and an inductor (**LC Circuits**), the time dependence of the charge stored in the capacitor can be modeled as **simple harmonic motion.**

Video 1 showed the current and voltage data was periodic.

Watch on to find out why!

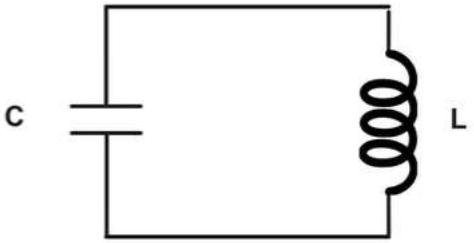

# LC Circuits – A comic

E-Field
B-Field
Current

**General Summary**

- E-Field in capacitor generates a current in the circuit.
- Flowing current creates a B-field in the inductor.
- Collapsing B-field causes current to flow.
- Current charges capacitor generating an E-field…

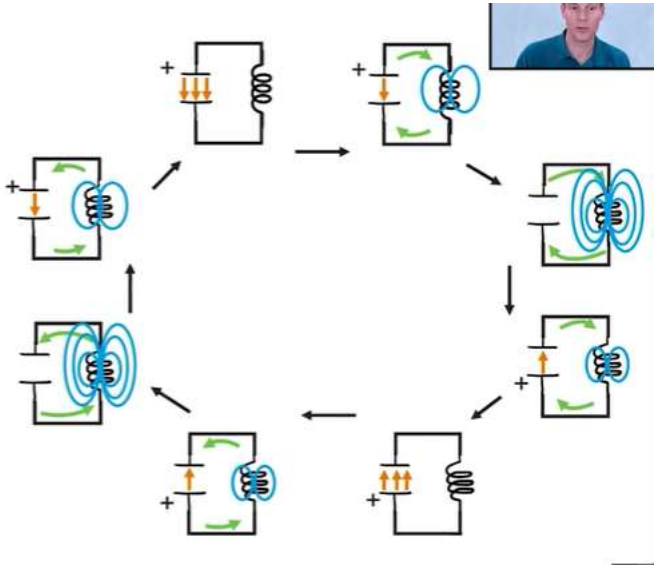

## Kirchhoff's Loop Rule

**Kirchhoff's loop rule:** The sum of potential differences across all circuit elements in a single closed loop must equal zero.

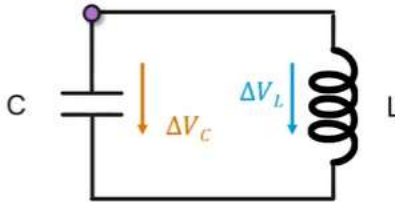


$$\Delta V_C - \Delta V_L = 0$$

$$\frac{q}{C} - \left(-L\frac{dI}{dt}\right) = 0$$

$$L\frac{dI}{dt} = -\frac{q}{C}$$

$$\Delta V_L = \varepsilon = -L\frac{dI}{dt}$$

$$\Delta V_C = \frac{Q}{C}$$

$$I = \frac{dq}{dt} \rightarrow \frac{dI}{dt} = \frac{d^2q}{dt^2}$$

$$L\frac{d^2q}{dt^2} = -\frac{q}{C}$$

$$\frac{d^2q}{dt^2} = -\frac{1}{LC}q$$

*FYI - Q: Max charge, q: time dependent charge q(t)*

## Simple Harmonic Motion Comparison

Mass-spring systems: $-kx = m\frac{d^2x}{dt^2}$ → $\frac{d^2x}{dt^2} = -\frac{k}{m}x$

Simple pendulums: $-g\theta = L\frac{d^2\theta}{dt^2}$ → $\frac{d^2\theta}{dt^2} = -\frac{L}{g}\theta$

LC Circuits: $-\frac{q}{C} = L\frac{d^2q}{dt^2}$ → $\frac{d^2q}{dt^2} = -\frac{1}{LC}q$

The pattern continues! LC Circuits follow SHM!

***Super cool (Non-AP) fact:*** *Electrical circuits can be used to "simulate" physical systems! In these simulations, Inductance is the analog for mass and 1/Capacitance is the analog for the spring constant! I leave it to you to discover more if you would like after the AP exam : )*

## Sample Problem

Which of the following circuits will exhibit oscillatory behavior when the switches are closed? *Assume all capacitors in a circuit with a battery are initially uncharged and those without a battery are initially charged.* (Select all that apply)

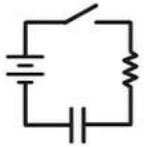

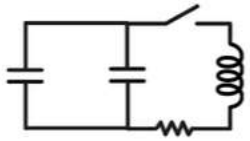

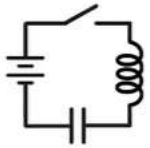

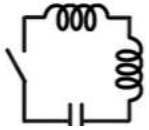

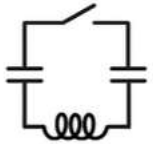

## Sample Problem

Which of the following circuits will exhibit oscillatory behavior when the switches are closed? *Assume all capacitors in a circuit with a battery are initially uncharged and those without a battery are initially charged.* (Select all that apply)

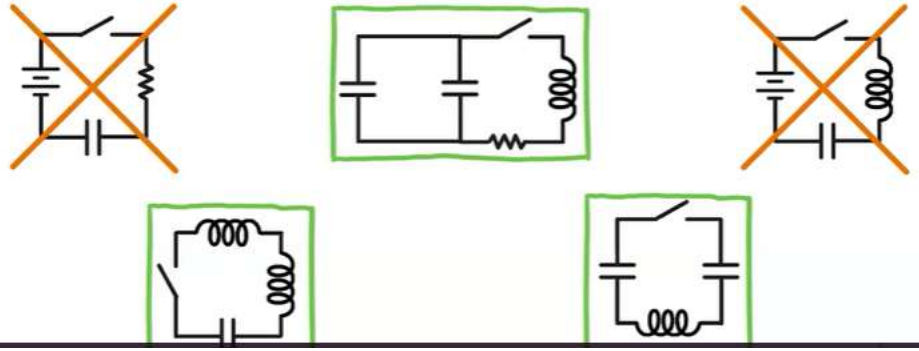

While the current in an LC circuit is at its maximum, what is true about the magnitude of the EMF of the inductor?

A. The EMF is at its maximum

B. The EMF is constant

C. The EMF is zero

D. More than one answer above

While the current in an LC circuit is at its maximum, what is true about the magnitude of the EMF of the inductor?

A. The EMF is at its maximum

B. The EMF is constant

C. The EMF is zero

D. More than one answer above

$$\varepsilon = -L\frac{dI}{dt}$$

Maximum current occurs when instantaneous $\frac{dI}{dt} = 0$.

If current was still increasing or decreasing, it couldn't be the maximum!

A graph shows the current in an LC circuit as a function of time.

If another identical circuit was made but the voltage was increased, what, if anything, will change about the graph?

A. The amplitude only

B. The period only

C. The period and amplitude

D. Nothing will change

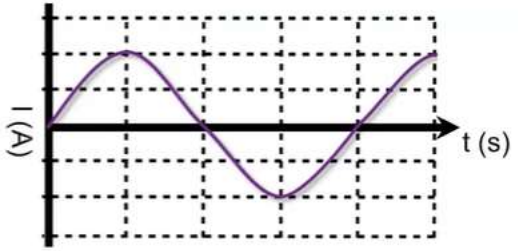

A graph shows the current in an LC circuit as a function of time.

If another identical circuit was made but the voltage was increased, what, if anything, will change about the graph?

- **A** The amplitude only
- **B** The period only
- **C** The period and amplitude
- **D** Nothing will change

$$\frac{d^2q}{dt^2} = -\frac{1}{LC}q$$

To change SHM equation, L or C must change.

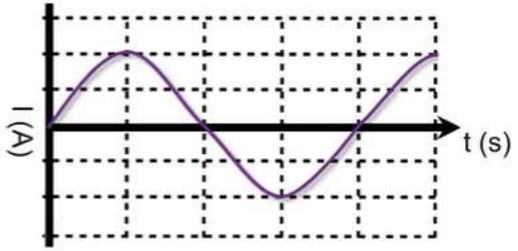

# Takeaways

- In circuits containing only a charged capacitor and an inductor (LC Circuits), the time dependence of the charge stored in the capacitor can be modeled as **simple harmonic motion.**

- The derived equation showing SHM for an LC Circuit is: $\frac{d^2q}{dt^2} = -\frac{1}{LC}q$

- The equation is derived from Kirchhoff's loop rule using the potential difference for a capacitor and the EMF of an inductor.

- Come back for the FINAL E&M video (13.6 Video 3) to learn about how to apply this equation mathematically to graphs. See you there!

# 13.6.3

Deriving the angular frequency of an ideal LC circuit, and comparing/calculating the period of oscillation in various cases

## Key Equations

| | |
|---|---|
| $\frac{d^2q}{dt^2} = -\frac{1}{LC}q$ | • SHM for an LC Circuit |
| $\frac{d^2x}{dt^2} = -\omega^2 x$ | • In mechanics, this second order differential equation is derived for an object exhibiting SHM<br>• $\omega$: Angular Frequency |
| $T = \frac{2\pi}{\omega}$ | • $T$: Period |

## Tying it together

The angular frequency of an oscillating LC circuit can be derived from the differential equation that describes an LC circuit.

$$\frac{d^2q}{dt^2} = -\frac{1}{LC}q$$

$$\frac{d^2q}{dt^2} = -\omega^2 q$$

$$\omega^2 = \frac{1}{LC}$$

$$\omega_{LC} = \frac{1}{\sqrt{LC}}$$

$$T = \frac{2\pi}{\omega}$$

$$T = \frac{2\pi}{\frac{1}{\sqrt{LC}}}$$

$$T_{LC} = 2\pi\sqrt{LC}$$

Look familiar?

$$T_s = 2\pi\sqrt{\frac{m}{k}} \qquad T_p = 2\pi\sqrt{\frac{L}{g}}$$

## Units "check-up" (AKA dimensional analysis)

**L**: Inductance – Henrys (H)

$$\varepsilon = -L\frac{dI}{dt} \rightarrow \mathrm{V} = H\frac{A}{s} \rightarrow \mathrm{H} = \frac{Vs}{A} = \frac{Vs}{C/s} \rightarrow \mathrm{Henry}\ (H) = \frac{Vs^2}{C}$$

**C**: Capacitance – Farads (F)

$$C = \frac{Q}{\Delta V} \rightarrow \mathrm{Farad}\ (F) = \frac{C}{V}$$

**T**: Period (seconds/cycle)

$$T = 2\pi\sqrt{LC} \rightarrow T = 2\pi\sqrt{\frac{Vs^2}{C}\frac{C}{V}} \rightarrow T = 2\pi\sqrt{s^2}$$

$$\frac{seconds}{cycle} = \frac{seconds}{cycle}$$

The units work out!

# LC comic redux

E-Field
B-Field
Current

Cosine function…

It's Periodic!
It's SHM!

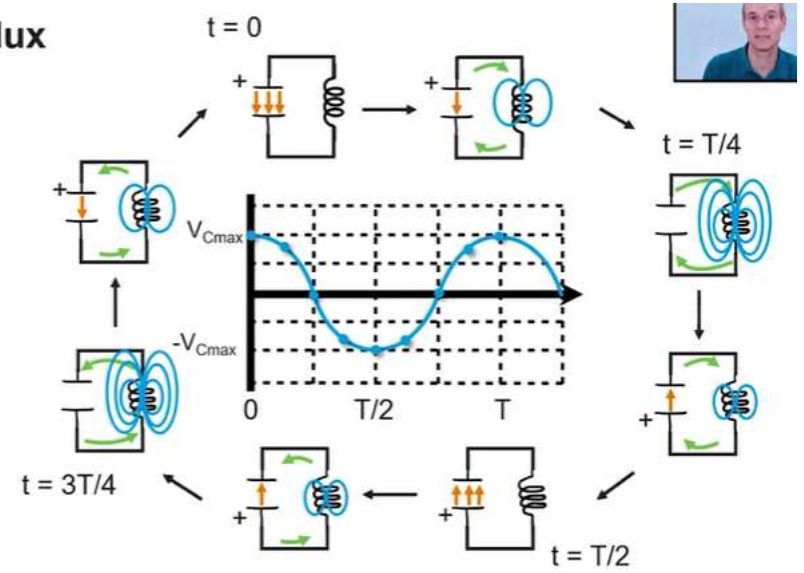

The two graphs shown at right measure the voltage of a capacitor in an LC Circuit as a function of time.

The **inductance of each is identical**, but they are charged to **different voltages**. Which one has a greater capacitance, C?

$T_A > T_B$ $\quad$ $T = 2\pi\sqrt{LC}$

Higher Period → Higher Capacitance

$C_A > C_B$ *Voltage does not affect the period of oscillation*

Graph A

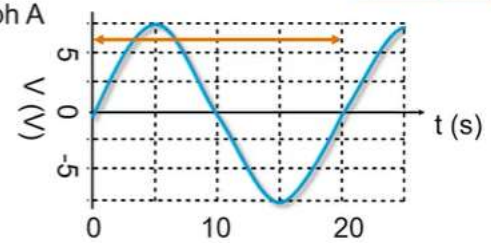


Graph B

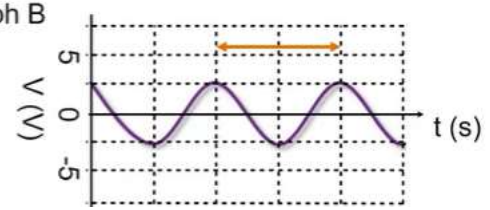

# Calculating Capacitance

The graphs shown at right measure the current in an LC Circuit as a function of time. The inductance is known to be **0.8 H**.

a) What is the capacitance, C, of the capacitor?

b) What is the maximum voltage of the capacitor?

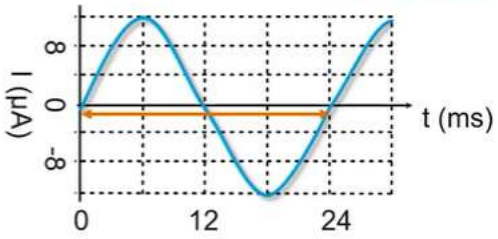


$T = 2\pi\sqrt{LC}$ $\quad T = 24\ ms = 0.024\ s$

$0.024\ s = 2\pi\sqrt{(0.8\ H)C}$

*Calculator warning!* → $1 \div 2\pi \neq 1 \div (2\pi)$

# Calculating maximum voltage

The graphs shown at right measure the current in an LC Circuit as a function of time. The inductance is known to be **0.8 H.**

a) What is the capacitance, C, of the capacitor?

b) What is the maximum voltage of the capacitor?

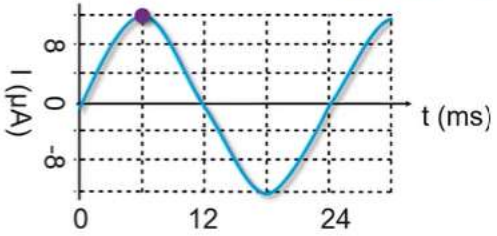


$$C = 1.82\ x\ 10^{-5} F$$

$$U_{Cmax} = U_{Lmax}$$

$$\frac{1}{2} C \Delta V_{max}{}^2 = \frac{1}{2} L I_{max}{}^2$$

$$\Delta V_{max}{}^2 = \frac{L I_{max}{}^2}{C}$$

$$\Delta V_{max} = \sqrt{\frac{L}{C}} I_{max}$$

$$\Delta V_{max} = \sqrt{\frac{0.8\ H}{1.82\ x\ 10^{-5} F}} (12\ x\ 10^{-6} A)$$

$$\Delta V_{max} = 2.5\ x\ 10^{-3} V = \mathbf{2.5\ mV}$$

## Calculating inductance from an equation

The following equation is given for the potential difference of a capacitor in an LC circuit as a function of time: $\boldsymbol{V_C(t) = (9\,V)\cos(5t + \pi)}$

If the capacitance is **0.4 F**, what is the inductance, L, of the circuit?

Mechanics "Throwback" equation: $x(t) = A\cos(\boldsymbol{\omega} t + \phi)$ $\qquad \omega = 5\,rad/s$

$$\omega = \frac{1}{\sqrt{LC}} \qquad \omega^2 = \frac{1}{LC} \qquad L = \frac{1}{C\omega^2} \qquad L = \frac{1}{(0.4\,F)(5\frac{rad}{s})^2}$$

$$\boldsymbol{L = 0.1\,H}$$

# Takeaways

LC circuits can be modeled as **Simple Harmonic Motion** (**SHM**) with an angular frequency equal to the following:

$$\omega_{LC} = \frac{1}{\sqrt{LC}}$$

The period of an LC circuit is equal to the following:

$$\boldsymbol{T = 2\pi\sqrt{LC}}$$

Increasing either the inductance or capacitance causes the circuit to oscillate with a shorter frequency/longer period.

# And That's All Folks!

On behalf of College Board, thank you for exploring AP Physics C Electricity and Magnetism this year!

We hope you have found the videos and other resources on AP Classroom helpful.

Best of skill to you on the AP Physics C: Electricity and Magnetism exam and whatever science awaits you beyond!

Gazelle